PAGE	

BY	CHK	REVISION RECORD MODIFICATIONS	DATE	REV.
ALLEN		RELEASE TO PRODUCTION	2008,7,28	1.0

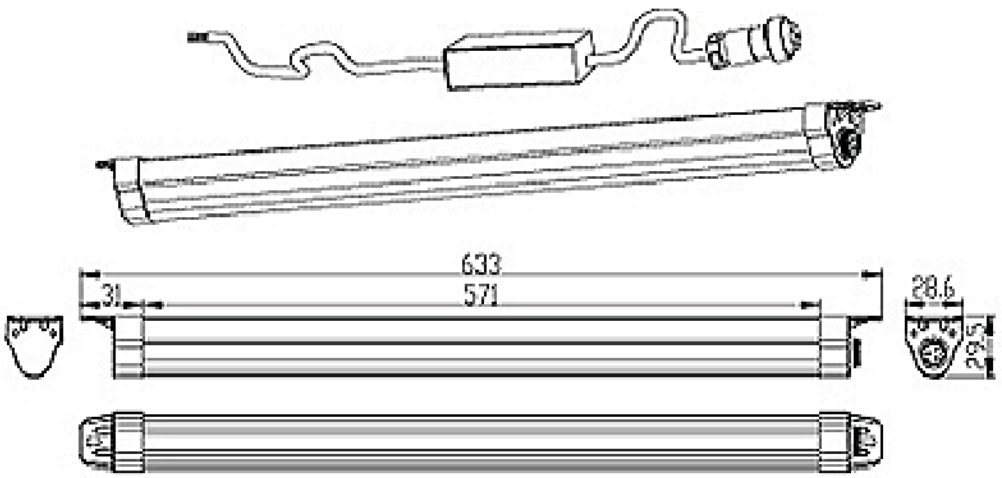

Notes:

All dimensions are in millimeters;
Tolerances are ±1.0mm unless otherwise noted.

Max. Light Intensity: 130cd

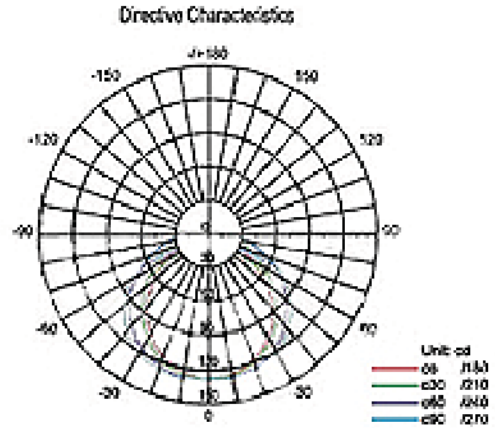

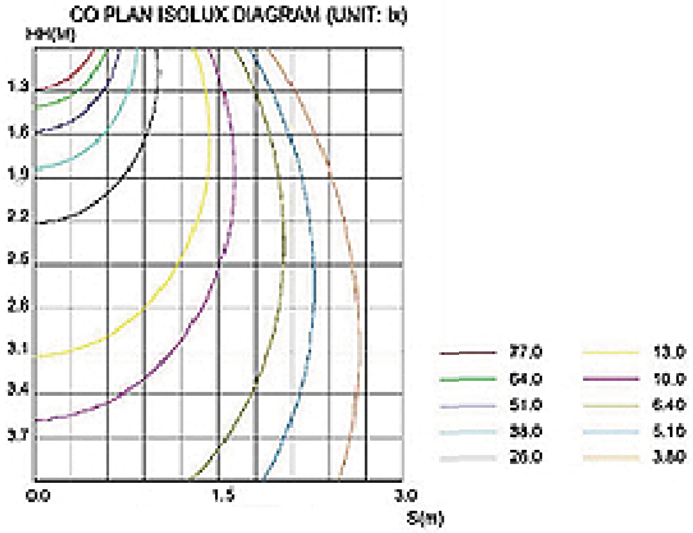

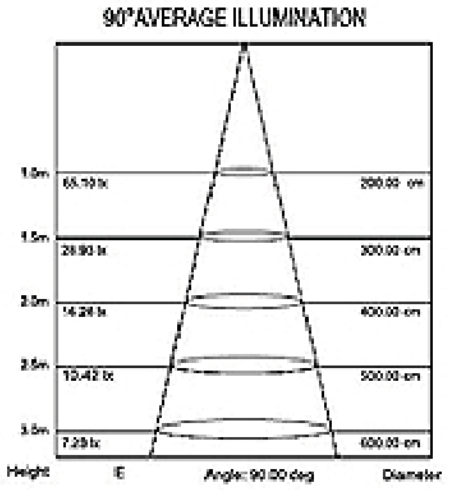

APPRO	CHECK	DRAWN	PART NO.				DESCRIPTION	VIGORTEC
			ITEM NO.					
			DRAW NO.					
			UNIT		SCALE	no		
			TOLER		NO.		Tel:0769 2202 0068 Fax:0769 2202 0069 E-mail:sales@vigortec.com	